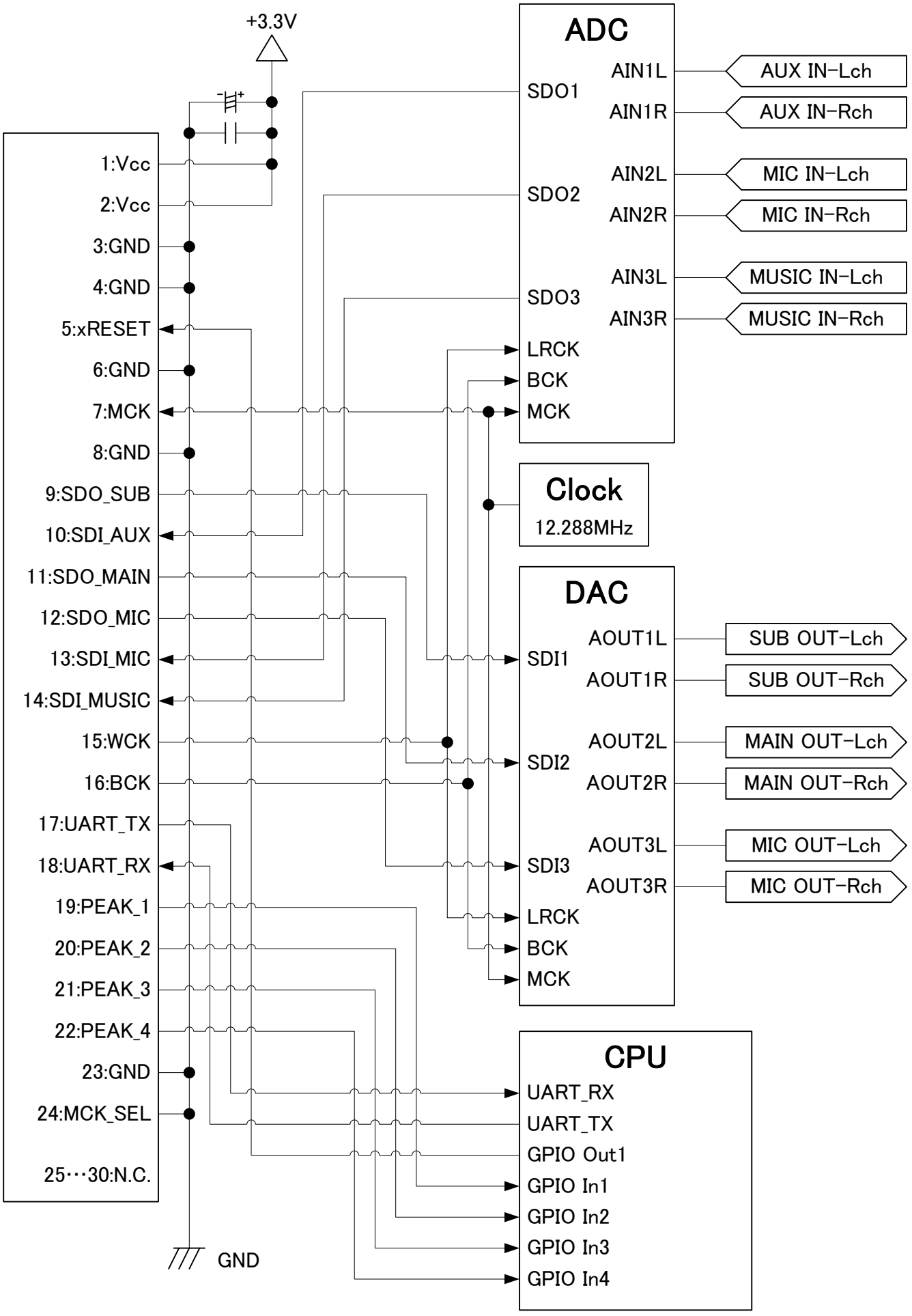01-DSP-R Sample Connection